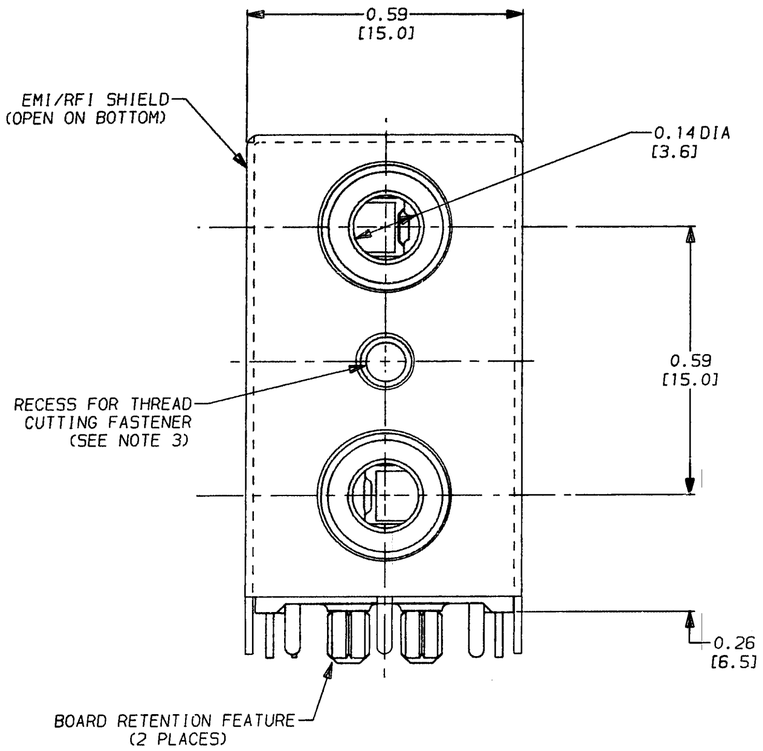

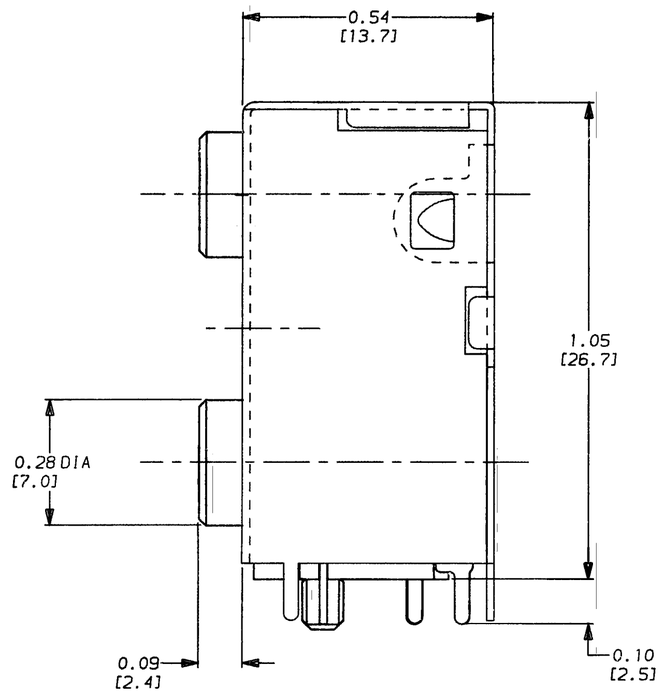

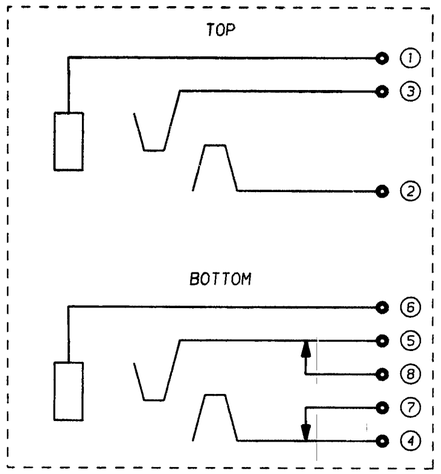

SCHEMATIC

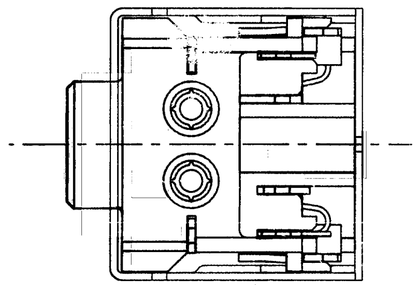

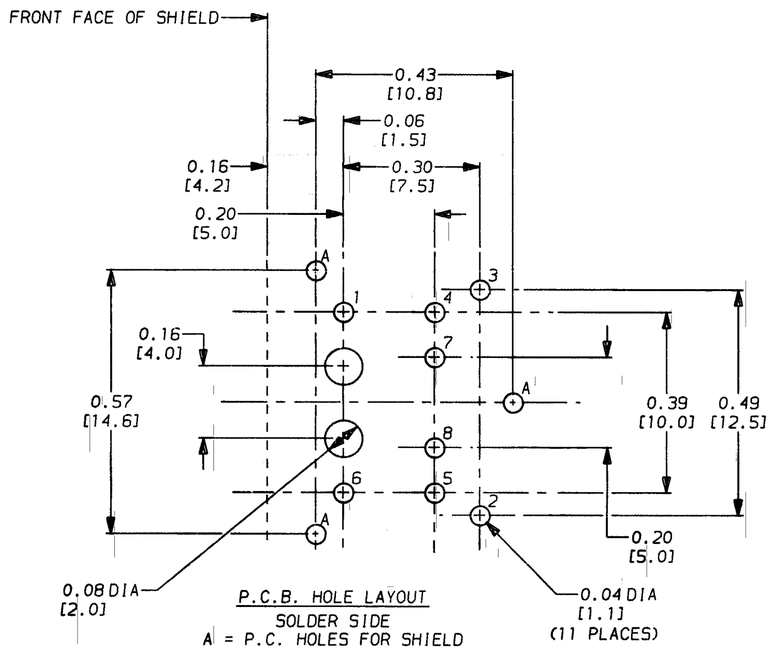

P.C.B. HOLE LAYOUT
SOLDER SIDE
A = P.C. HOLES FOR SHIELD

PERFORMANCE SPECIFICATIONS

1. INSERTION/EXTRACTION FORCES, INITIAL: 0.8 TO 6 LBS.
2. DIELECTRIC WITHSTANDING VOLTAGE: 500 VAC.
3. INSULATION RESISTANCE: INITIAL, 100 MEGOHMS, MINIMUM.
4. CONTACT RESISTANCE:
   BETWEEN PLUG & JACK: 50 MILLIOHMS MAXIMUM.
   BETWEEN SPRINGS & SHUNTS: 30 MILLIOHMS MAXIMUM.
5. LIFE: 5000 CYCLES, MINIMUM.

MATERIAL SPECIFICATIONS

TIP & RING SPRINGS - 0.010 PHOSPHOR BRONZE, SILVER PLATED.
SHUNT TERMINALS - 0.016 BRASS, SILVER PLATED
TIP & RING TERMINALS - 0.016 BRASS, SILVER PLATED
SLEEVE TERMINALS - 0.016 PHOSPHOR BRONZE, SILVER PLATED
HOUSING - LIQUID CRYSTAL POLYMER.
SHIELD - 0.016 PRE-TINNED BRASS

NOTES:

1. SHIELD ISOLATED FROM TERMINALS #1 AND #6.
2. WIDTH OF ALL TERMINALS = 0.032" [0.814mm].
3. USE CAMCAR TEXTRON S25 T8 TORX PAN HEAD "DURO-PT" THREAD CUTTING FASTENER OF APPROPRIATE LENGTH, OR EQUIVALENT.
4. ALL DIMENSIONS REFERENCE ONLY.

CUSTOMER DRAWING

CAD/CAM DWG. NO.
35RAPC7JS.CD

SHEET 1 OF 1

ISSUE	CHANGE NO.	DATE	BY	APP'D
N	ECO #21834	9-26-97	OM	JJ
M	ECO #20277	7-10-96	DEA	JF
L	ECO #20134	9-7-95	DA	TAO
K	ECO #20133	9-7-95	DA	TAO
J	ECO #20132	9-7-95	DA	TAO
H	ECO #20131	9-7-95	DA	TAO

REVISIONS

☆ STAR SYMBOL DENOTES CRITICAL DIMENSION, SEE S/C ENGINEERING STANDARD ES-0001

UNLESS OTHERWISE SPECIFIED

1. ALL DIMENSIONS IN INCHES
   TWO PLACE DECIMAL ±.01
   THREE PLACE DECIMAL ±.005
   FRACTIONAL DIMENSIONS ±1/64
   ANGLES ±1/2°
   ALL DIA'S CONCENTRIC WITHIN .005 T.I.R.
2. REMOVE ALL BURRS
3. MAKE NO DIMENSIONAL ALLOWANCES FOR APPLIED FINISHES, I.E., PLATING, PAINTING, ETC.
4. HOLES ON THE SAME CENTERLINE MUST BE ALIGNED WITHIN ±.002

DO NOT SCALE DRAWING

THIS DRAWING DESCRIBES A DESIGN CONSIDERED PROPRIETARY IN NATURE, DEVELOPED AND MANUFACTURED BY SWITCHCRAFT INC. AND IS RELEASED ON A CONFIDENTIAL BASIS FOR IDENTIFICATION PURPOSE ONLY.

SIZE	WIDTH	MULT	LBS./M	TEMPER

FINISH
SPEC. NO.
FIRST USED ON
SCALE 1 = 0.25

MATERIAL
SPEC. NO.

Switchcraft®

DATE DRAWN	BY	CHK'D	APP'D
9-8-93	SG	EBR 9-14-93	IAC 9-14-93

NAME: 3.5mm VERTICAL DUAL JACK

PART NO. 35RAPC7JS

ISSUE N

C ROUTING